APT Weather Station Reception on 137MHz with a Patch Antenna and DVB-T Stick

By Gunthard Kraus, DG8GB

First published in the German UKW Berichte journal 4/2014

This idea arose while browsing The Internet and finding a homepage with weather images received from a satellite. So I thought how I could do that with existing equipment - and what would need to be developed. This article is the result of a revised and expanded lecture given at the 2014 VHF conference in Weinheim

1 Introduction

Such projects always start with an extensive planning phase to find the shortest route to the destination. It soon became clear that the following modules, already available from completed developments, could be used:

a. A commercially available DVB-T Stick as measuring receiver [1] and [2]
b. A very low noise preamplifier with sufficient gain described in [3].

New ground was broken for the antenna used for this project. The author has already implemented numerous patch antenna projects successfully and has repeatedly published the corresponding development procedures. This kind of antenna offers a circular polarised design with its spherical radiation pattern. For this purpose, the back (in this case: the underside!) forms a perfect shield against the ground and you can even place the antenna directly flat on the ground. The "half wavelength", approximately 1 metre edge length in the 2m band, required for this project presents a big hurdle and is discussed later.

The concept finally implemented is shown in **Fig 1** and shows what items need to be developed. The patch antenna and a narrow band 137MHz bandpass filter need to be developed. The fact that various computer programs also have to be used successfully is aptly described by the biblical quotation "every day has its own plague".

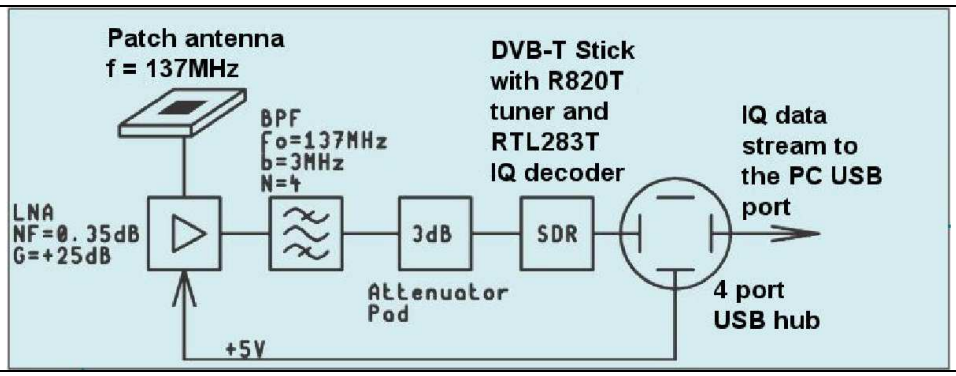

Fig 1: From now on probably the most basic receivers will look like this: an analog front end followed by digital signal processing feeding a USB port

2 The components of the receiver

2.1. The low noise preamplifier

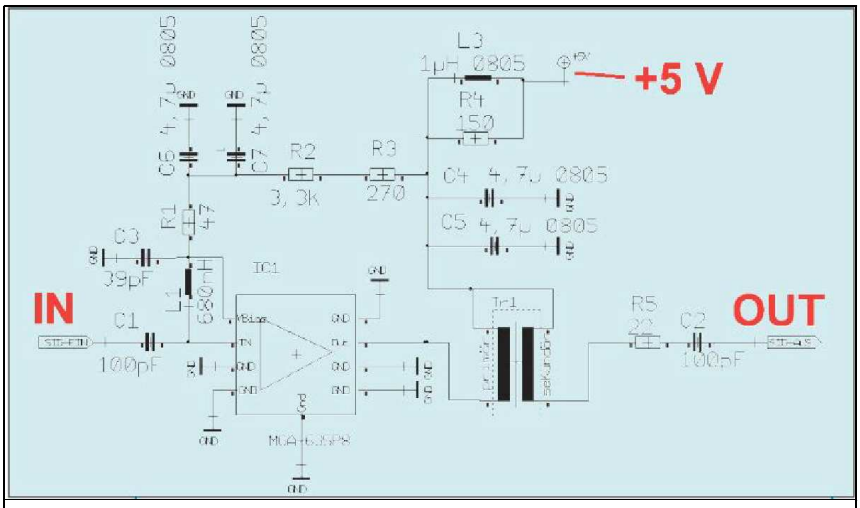

Fig 2: Technical development has not stopped even for LNAs. This is the circuit that stands out at 137MHz with a noise figure of 0.35dB and an amplification of +25dB

The development of the preamplifier for 137MHz can be read in [3]. The operation is explained quickly here with the help of **Fig 2.** The MMIC contains a GaAs-pHEMT cascode amplifier with a "bias" circuit with its voltage fed to pin 1 via L1 and thus to the gate of the first pHEMT. The other inductance L2 on pin 7 forms the input resistance of the second stage. This preamplifier is operated with a supply voltage of +5V. A major problem of the pHEMT construction is stability at low frequencies, which is their tendency to oscillate. This is solved with a simple trick: with decreasing frequency the resistor R1 of approximately 50Ω at the input pin 2 effectively prevents the oscillation. It is decoupled by capacitor C3. A special feature is the transformer Tr1 (bandwidth = 500kHz to 1GHz) at the output. It brings the output reflectivity S22 between 130MHz and 200MHz to values better than -20dB. The details of its development and behavior can be found in [3]. The amplification of the arrangement in this frequency range amounts to approximately +25dB with a noise figure of around 0.35dB.

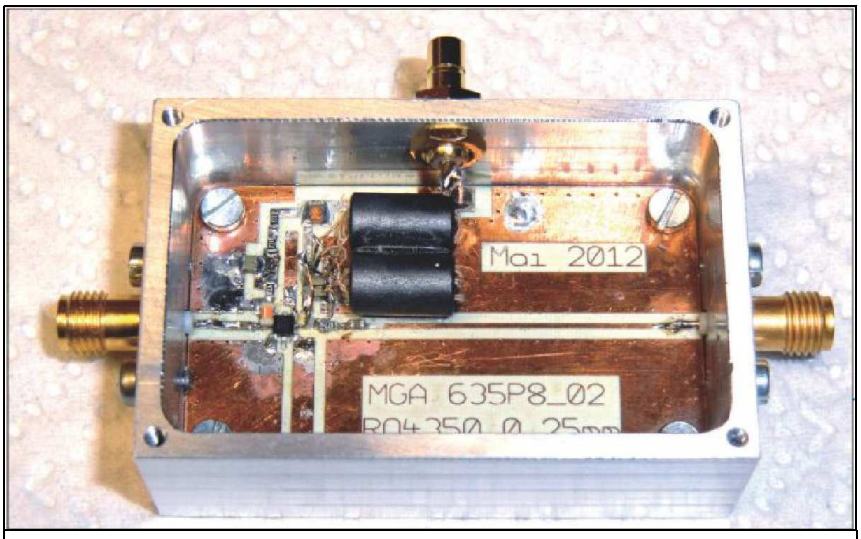

Fig 3: The design - everything is small. The main improvement comes from line transformer at the output

A view of the housing with the lid removed is shown in **Fig 3.** The 2: 1 transformer is easy to recognise. The MMIC looks quite harmless but it has 4 connections on each side and a small ground strip on the bottom with the whole thing only 2mm x 2mm, which represents a real challenge to solder. For this reason friendly professionals were enlisted who are dealing with such tiny components every day.

2.2. The 137MHz bandpass filter

This should protect the input of the DVB-T Stick from strong "out-of-band" signals, which lead to overdriving or intermodulation. The Stick inputs are not exactly famous for extremely high intermodulation strength, even when heavily limited.

As usual this presents a dilemma: a higher filter degree gives steeper flanks and greater selectivity, but more components need more space, and the limited space leads to considerable attenuation. The same milled aluminium housing as used for the LNA (PCB size: 30mm x 50mm) is used for the bandpass filter. On this board, a maximum of 4 shielded filter coils (NEOSID type 10.1) as well as 4 SMD trimming capacitors must be accommodated for fine adjustment. Therefore, the "Coupled Resonator Type" was used as the basic circuit because:

a. It allows small bandwidths and steep filter edges with realistic component values.
b. A design can be carried out easily with the filter calculator provided free of charge in the ANSOFT DESIGNER SV software.

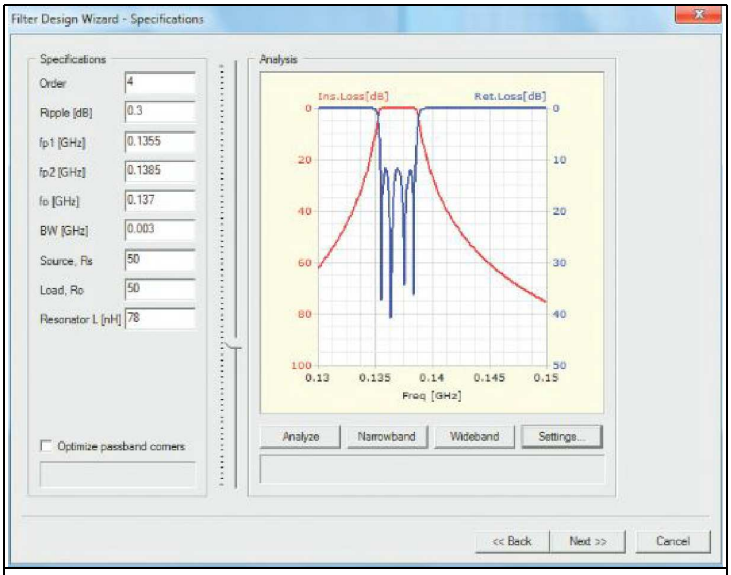

Fig 4: The ANSOFT DESIGNER SV is still a strong horse; The integrated filter calculator used for the 137MHz bandpass filter

The design screen for the Chebyshef bandpass filter selected is shown in **Fig 4** with the filter degree N = 4, a ripple of 0.3dB and a bandwidth of 3MHz for a centre frequency of 137MHz.

Note the attenuation:

At 130MHz it is already over 60dB, at 150MHz it is already 75dB!

For this type of filter, the inductance must be specified (the same for all 4 circuits). NEOSID type 10.1 coils in silver screening cans were used. From preliminary tests it was found that the 73nH version with a removable brass core not only increased the inductance to 78nH, but also the quality up to Q = 150. These values were used in the simulation and this resulted in the circuit shown in **Fig 5:**

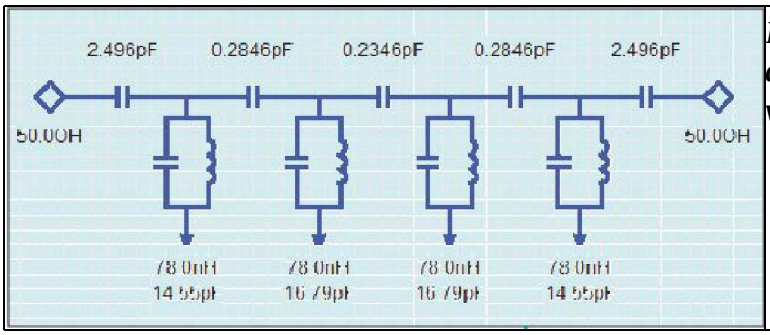

Fig 5: This is how fast you get to the desired circuit with its component values

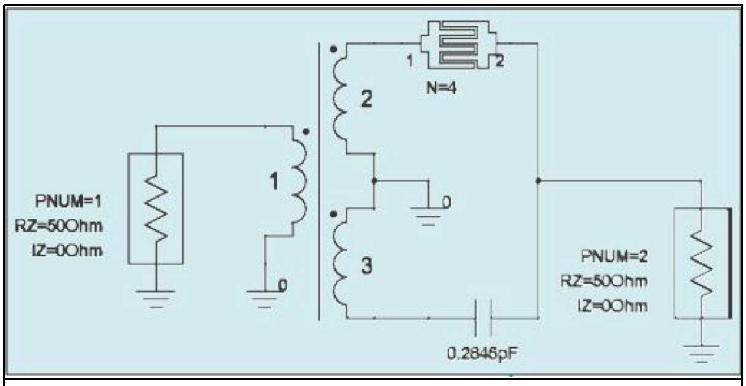

Fig 6: This ideas must be used: The mechanical data for the interdigital capacitor can only be determined with this "half-bridge" technique (see text)

Up to three 0603 NPO SMD capacitors with a trimmer (1.4 ... .3.5pF) were connected in parallel as circuit capacitors. Each "coupling capacitor" of 2.49pF consists of a parallel connection of 1.5pF and 1pF in SMD capacitors soldered together "piggy back". The actual coupling capacitors consist of finger-shaped printed "interdigital capacitors" whose design was carried out with the help of the ANSOFT DESIGNER SV and the circuit principle shown in **Fig 6:**

A half-bridge is used, often found in crystal filters, and the dimensions of the interdigital capacitor are changed until an S21 value below -70dB is obtained at 137MHz. The capacitance value of 0.2846pF (or 0.2346pF for the middle coupling capacitor) is correct.

The following considerations were made for the mechanical dimensions of this structure:

a. The distances between the fingers should not be a headache for the PCB manufacturer, so 0.25 mm was chosen.
b. In order not to make the finished capacitor too large, a finger width of 0.5mm was used.
c. The complete arrangement should be approximately a square. This finally yields the required number of fingers (here: N = 4) and the length of the fingers calculated for this purpose.

Name	Value	Unit	Evaluated Value	Description
N	4		4	Number of fingers
W	0.5	mm	0.5mm	Finger width
S	0.25	mm	0.25mm	Spacing between fingers
L	3.85	mm	3.85mm	Length of overlap between fin...
WT	0.5	mm	0.5mm	Terminal strip width
WF1	1.77	mm	1.77mm	Feed line width at node 1
WF2	1.77	mm	1.77mm	Feed line width at node 2
WCA	2.75	mm	2.75mm	Capacitor width

Fig 7: This list of capacitor dimensions is needed later on for the circuit board layout

This leads to the property table shown in **Fig 7.** The mechanical dimensions for the circuit board layout of the finished interdigital capacitor can be derived from this.

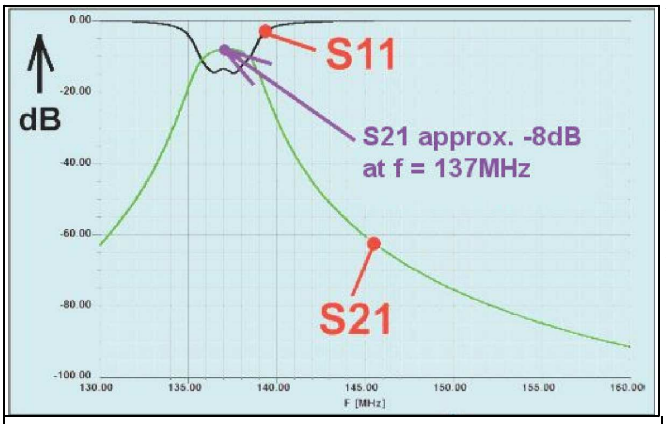

Fig 8: This is the dream result. Everything should end up like this!

Now it is exciting, because in the simulation circuit the fixed capacitors are now replaced by these interdigital versions. This is followed by a consolidation phase. Each interdigital capacitor has an additional capacitance to ground show in the equivalent circuit diagram as a pi-circuit at each end. These parallel capacitors de-tune the resonant circuits so you have to correct and simulate again until you finally have the result shown in **Fig 8.** The final circuit is shown in **Fig 9** and the finished circuit board layout in **Fig 10.**

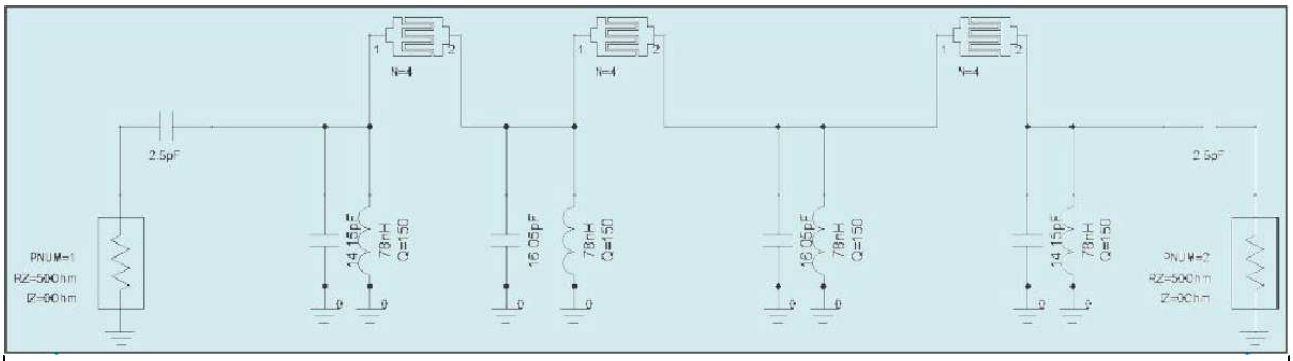

Fig 9: The final corrected circuit diagram associated with the simulation of Fig 8. Interdigital capacitors and parallel capacitors have been added to the circuit

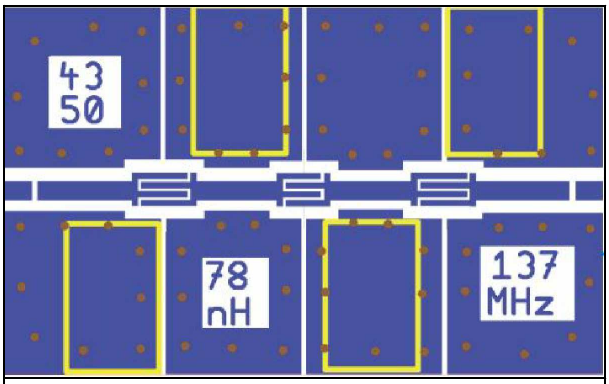

Fig 10: The board and its details; For people who want to make a copy (not to scale)

After setup and the adjustment the measured bandwidth was identical to the result of the simulation but the attenuation was not less than 10.5dB. It was considered what might be improved, e.g. replace the NPO capacitors with high quality microwaves ATC capacitors (size 0603 as well). The attenuation decreased to approximately 9dB. Further improvement possibilities were the trimming capacitors (quality: also NP0) as well as the circuit board. The circuit board manufacturer did not use the desired gold plating but had only tinned the tracks. The board material itself (ROGERS 4350B) is usable up to over 10GHz.

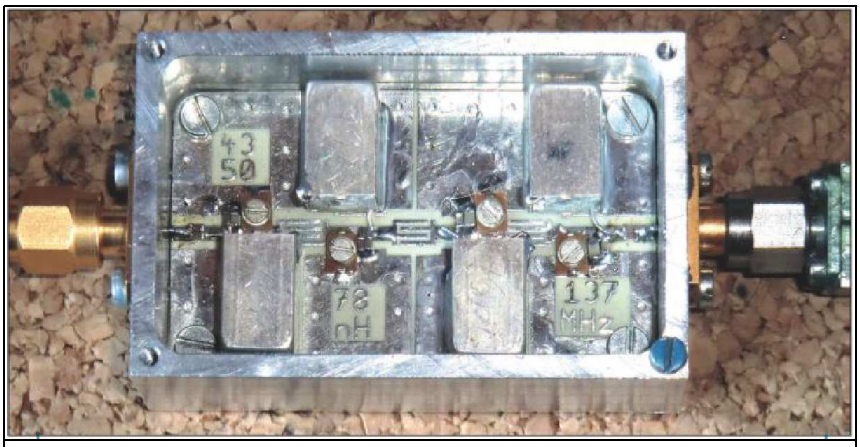

Fig 11: The finished bandpass filter in its case - and it is already in use in receiver

A photograph of the finished building block including the housing is shown in **Fig 11.** The interdigital capacitors as well as the coils and trimming capacitors are easy to recognise. The remaining 0603 size components are virtually invisible.

3 The DVB-T Stick as a Software Defined Receiver

These Sticks have been getting smaller and cheaper (under €20 when ordered via eBay from China) lately. Of course you have to pay attention to which IC is used for the tuner:

The E4000 goes up to 2.26Hz, but has a reception gap form 1100MHz to 1235MHz. In addition, its reception starts at 50MHz. However, since it is slowly replaced by the "R820T", it is now more difficult to obtain and its price has increased massively.

Therefore the version with the R820T was used, which starts at 25MHz and works very reliably up to

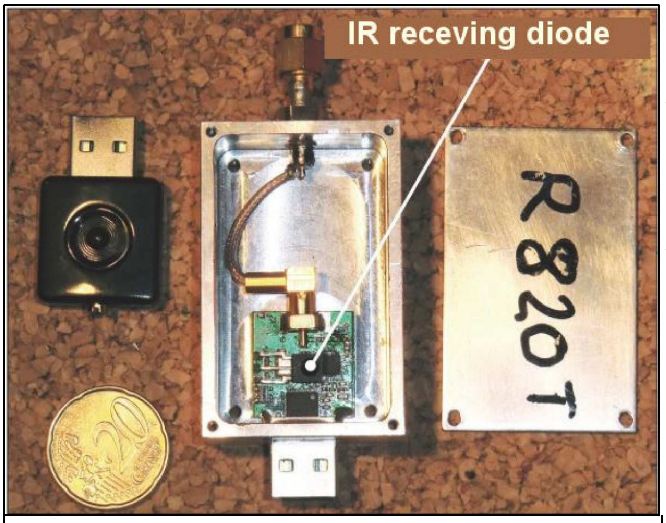

Fig 12: The tiny PCB from the DVB-T Stick. The milled aluminium housing is clearly too big!

1400MHz without a gap. In addition, the amplification can be changed by hand by almost 50dB which is more than the E4000 (this gives only 42dB). The IQ decoder type RTL2832U, which is mostly used for this purpose, must also be installed on the board - Please check carefully before buying!

Of course, there was still a lot of work before commissioning; The Stick has been removed from its plastic housing, built into a milled aluminum housing and the antenna input changed from MCX to SMA as shown in **Fig 12.**

4 Now things get moving

4.1. SDR software

A good program is required to make a good measuring receiver. The proven and free software, "SDR#" (pronounced SDR sharp) is available from The Internet. It is continually improved and therefore you should update this software on your computer once a month.

4.2. The complete receiver

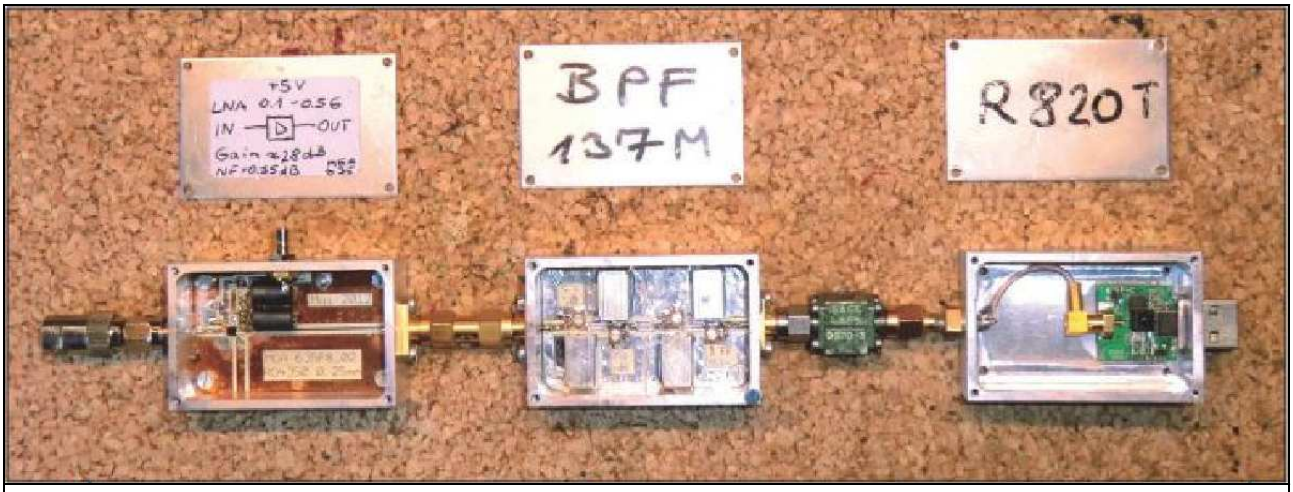

Fig 13: This is the complete experimental setup. It just waiting for the antenna cable, the USB cable for outputting the data and the +5V power supply for the LNA

The modules that form the receiving system are shown in **Fig 13.** With a 3dB SMA attenuator following the bandpass (gives the filter a better load than the Stick alone) results in a chain approximately 25cm long. At the LNA input there is a transition from SMA to BNC for the antenna cable connection. The USB cabling is missing in the picture.

Now for the reception and sensitivity tests. It was carried out with an HP8640B precision measuring

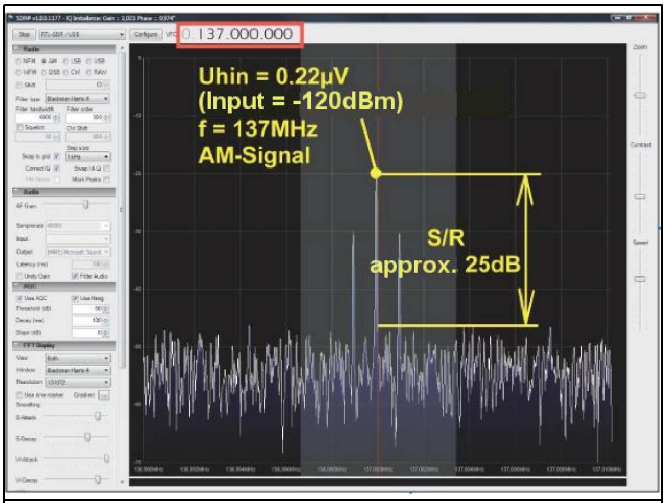

Fig 14: The screen with the measurement results is a real thanks for the effort

oscillator producing the "SDR#" screen shown in **Fig 14** when feeding with an AM signal with a carrier level of -120dBm = 0.22µV. You can only say: "Everything is good"

5 The patch antenna

In this area, the frequency range has been shifted to a new level, because no one has ever tried this before. The advantages are obvious: a simple design, right handed circular polarisation suitable for the satellite, excellent radiation characteristics with a directional diagram (with circular polarisation), theoretically a perfect sphere.

Indeed:

The active radiator is about half a wavelength with air as the dielectric. The edge length is more than 1m for a frequency of 137MHz. In addition, the underside must be a metal plate which also gives mechanical strength. But the antenna design is still difficult.

The design is based on a previous collection of smaller patch antenna designs (see various publications in VHF Communications Magazine as well as the SONNET tutorial on the author's homepage). But unfortunately the development of this antenna was the hardest!

The first test specimen was glued together from 20mm thick Styrofoam plates and covered with 0.05mm copper foil. This showed the principle but:

a. The dielectric constant for the Styrofoam at 137MHz appeared to be significantly smaller than expected, so an edge length of 1m was not sufficient. The resulting resonance was thus over 150MHz.
b. The lightweight construction was too unstable and flexible. The copper foil was damaged when touching the structure.

Fig 15: Compared to the racing bike, the size of the antenna is impressive

The next design stage was 40mm thick polystyrene (cheap) covered on both sides with 0.6mm thick Cu sheet from the plumbers merchant (expensive, approximately €100). The whole assembly was held together by 6mm thick plastic screws and an N socket on the bottom for the feed.

This specimen with an area of one square meter can be seen in **Fig 15** and the comparison of the size with the road bike is impressive. The diagonally chamfered corners affect the circular polarisation and the position of the feed ensures correct adjustment.

Unfortunately, due to the fact that at 137MHz the Styrofoam has a Q of greater than 50 but a very low

dielectric constant of only 1.05 meant that the previously selected radiator dimensions were still too small and the resonant frequency was still at 152MHz instead of 137MHz!

For the third design a polyethylene plate with a surface area of $1m^2$ and a thickness of 15mm was purchased from The Internet (price: approximately €100, weight over 10 kg) complete with electrical data. The total antenna weight (for plate and copper on both sides) has unfortunately increased to about 20kg.

The simulation data was:

Polyethylene with a thickness of 15mm
Dielectric constant = 2.4
Loss factor = 0.005

It was simulated in a box with a base area of 9m x 9m (comes from the SONNET requirement "distance of the structure from the box wall everywhere about 2 wavelengths"). Above the antenna there is an air cushion with the height "Half wavelength = 1.1 metre". The box lid is set to "Free Space". The patch itself is 730mm x 730mm, the diagonal corners are trimmed by 75mm (to achieve the right hand circular polarisation). An N type connector on the lower "ground" level was provided as feed connection. A pin made on the lathe extends through the polyethylene plate and was soldered to the socket and the patch. This is taken into account using a "Via" with a diameter of 5mm in the SONNET simulation.

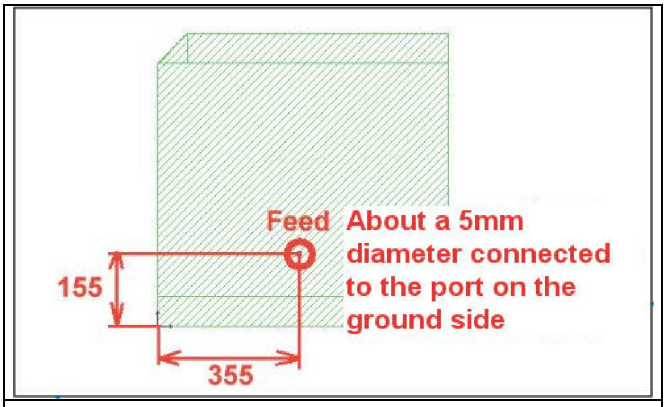

Fig 16: Something from "SONNET Lite". Information about the design sequence. This is the input screen with the antenna array

The corresponding SONNET editor screen and the feed point used are shown in **Fig 16:** (Feed = 355mm in horizontal and 180mm in vertical direction from the lower left corner).

The simulated antenna structure (**Fig 17**) begins with the bottom of the box as an infinitely good conducting ground plane. Followed by the polyethylene layer with a thickness of 15mm. A 1mm thick air layer was inserted between the lowest "ground" layer and the polyethylene because the copper sheets did not lay flat everywhere - especially when the thing curled by its own weight. It quickly became apparent that the free, but limited SONNET Lite version has its

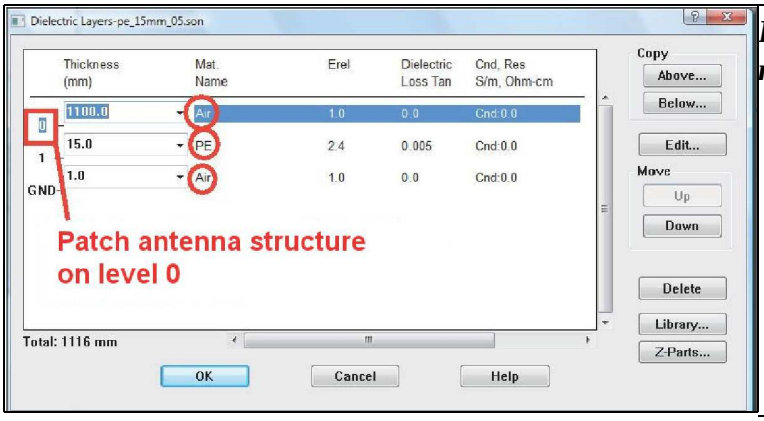

Fig 17: From the "Dielectric Layers" menu (see text)

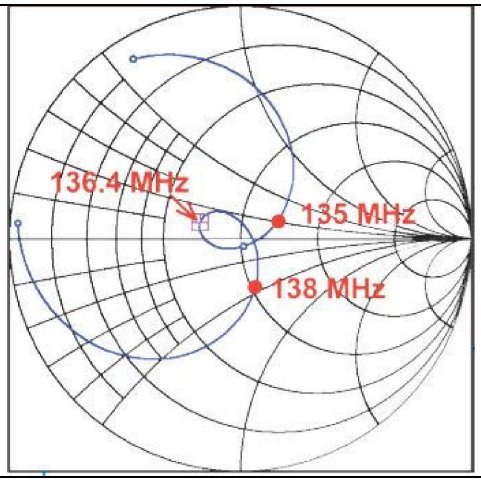

Fig 18: The S11 curve is very satisfactory. Shown in Smith chart

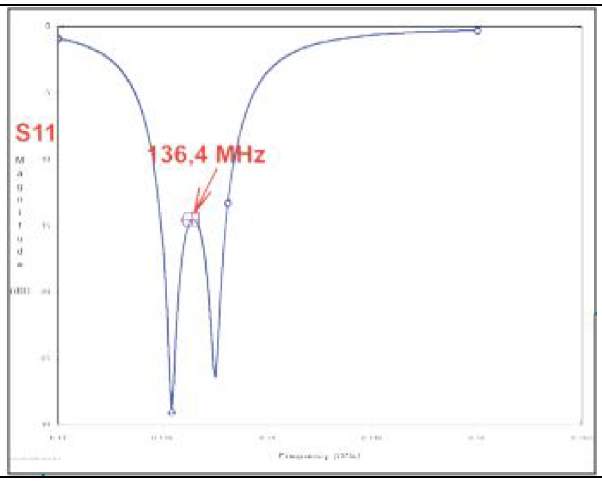

Fig 19: The cartesian diagram also shows the S11 behavior, this time in dB

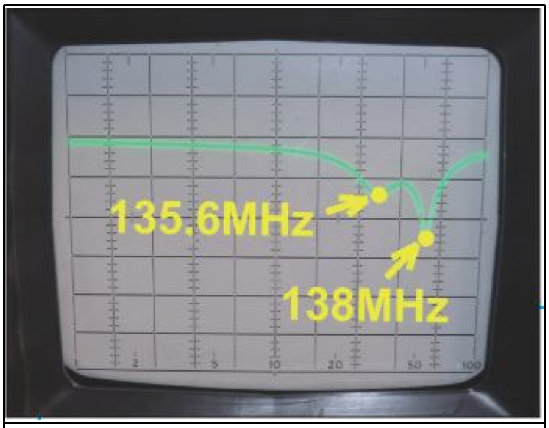

Fig 20: The S11 measurement on the finished antenna is satisfying, but only after the corresponding fine tuning

limitations: the lower ground plane of the antenna is not infinite in size; the size of the polyethylene used for the simulation should only be as large as the area of the antenna; the "space" contained lots of plastic screws; etc. The simulation was carried out with a "cell size" of 5mm x 5mm.

The very pleasing S11 simulation result is shown as a Smith Chart in **Fig 18** and as a Cartesian diagram in **Fig 19.** These almost match the measured results of the completed antenna shown in **Fig 20.** However, the author must confess that "fine tuning" was necessary. The patch dimensions were quite accurate because the resonance was exactly at 137 MHz BUT: the cut-off at the corners was too much and as with a clearly over critically bandpass filter, the S11 bandwidth was much too large combined with a very deep "hole" at the centre frequency.

So, "fine tuning" was performed with sheet metal pieces brazed to the corners to give a cut off of 40mm instead of 75mm. This resulted in the S11 curve shown in **Fig 20.** It was measured at the input of the antenna feed line (5 metre long RG58U cable) with an HP8410 network analyser

Fig 21: Now it's serious! The antenna is installed in the garden in front of the cellar workshop, the antenna cable (5m RG58) disappears through the cellar window

6 Finally it is finished!

Now the time had come: the antenna was placed in the garden on two plastic buckets. An RG58 cable approximately 5m long was pulled through the basement window into the basement workshop (**Fig 21**) and connected to the receiver. The "SDR#" software was started on the notebook and tuned to 137MHz.

And what was to be seen?

Only an insane noise level, which was at least 30dB higher than the one described in chapter 3.2. Individual carriers appeared briefly that were recorded as AM signals and on the basis of the short messages, e.g. "Hello Lufthansa Flight 309 ..." they could be identified as an air traffic announcements from the airport tower at Friedrichshafen. After a lot of experiments there was only one possibility: try again either very late in the evening or very early in the morning and hope that no "Man Made Noise" obliterates all interesting signals.

A search at 5 o'clock the next morning was successful: suddenly on 137MHz there was a clear FM signal seen on the spectrum display with approximately 35kHz bandwidth. The chirping and whistling used for APT transmissions was heard loud and clear from the PC loudspeaker. So it was quickly recorded as a "WAV file" using the "SDR#" "Recording" and "Audio" options. 10 minutes later the energy saving lamps belonging to a neighbour went on and the noise level rose by 15dB. Therefore, a more practical solution is still required e.g. antenna mounted at the highest point of the house roof. One possibility is directly under the roof and just above the desktop computer in the study on the upper floor.

7 The evaluation, the return for all the work

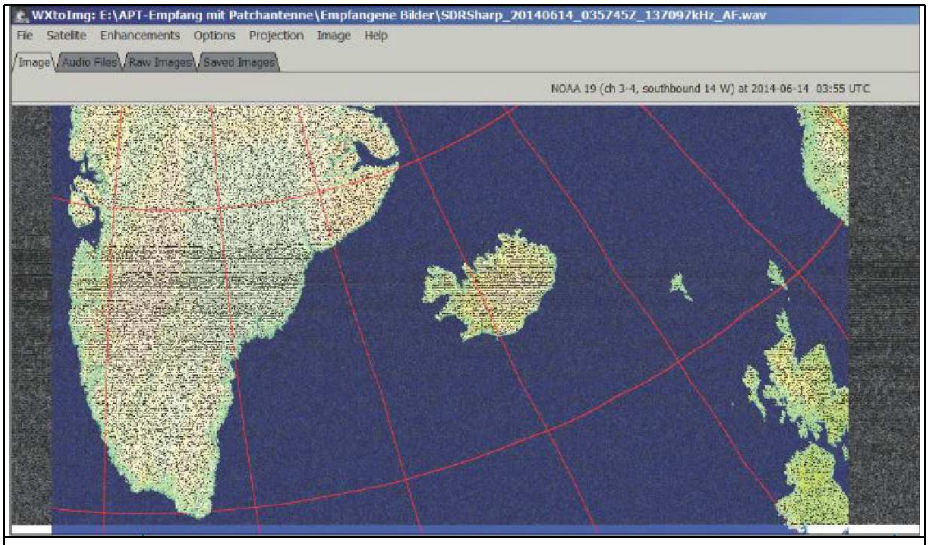

Fig 22: If you have this picture on the computer screen, you should be happy (see text)

The received signals were evaluated later using the free software "WXtolmg" downloaded from The Internet.

If reception is always perfect you should download another program (e.g. from "www.VBCABLE.com"), which serves as a "virtual audio cable" and directly connects the "SDR#" and "WXtolmg". This allows the weather image to be displayed directly on the PC screen without delay during reception.

The WAV file was tried with the "WXtolmg" software and a result was achieved very quickly. **Fig 22** shows the representation "MCIR map colour IR (NOAA)":

It is not very difficult to understand the picture:

In the middle there is Iceland, on the left Greenland, right below that is Ireland and Scotland and on the right is Norway. There are no clouds to be seen - after all it is stock photograph taken at night! The remaining details can be found either in the image or in the file name:

The satellite is NOAA19, which transmits on 137.079MHz at 3:55UTC. It's position is 14 degrees west (almost exactly above Iceland).

It was recorded on 14 June 2014 with the recording ending at UTC = 3 o'clock 57 minutes and 45

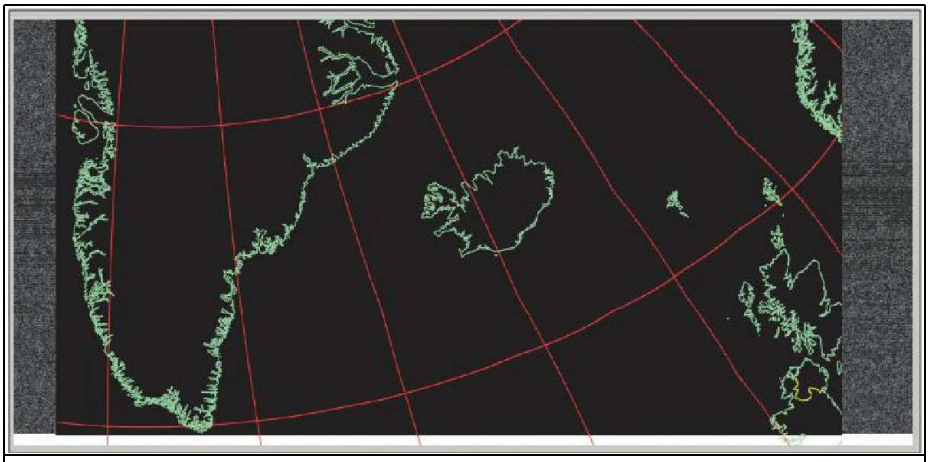

Fig 23: The same again, but now the land is only shown as a contour (see text)

seconds. The reception level was just under 0.2µV. After a calculation the distance between my QTH and the satellite is more than 2000km, which is amazing.

For fun you can select a second setting in “WXtolmg” called "Contrast enhance only" (NOAA channel A only) and you get **Fig 23.** Normally this is used for pictures with lots of cloud that are recorded during the day when the islands or land masses under the cloud cover have partly or completely disappeared.

At this point the author gives a heartfelt thank you to the hard working software programmers!

The goal was achieved with a lot of work, a lot of brain teasing, a lot of mechanics and much sweat ... but in the end, much pleasure in the received picture.

8 Literature

[1] Gunthard Kraus, DG8GB, "A DVB-T Stick With An E4000 Tuner As A Measuring Receiver”, UKW Berichte 2 / 2013, pages 131-148

[2] Gunthard Kraus, DG8GB: “The Never Ending Story Of The SDR Continues; Examination of a DVB-T Stick with an R820T tuner and RTL2832U decoder as a receiver”, UKW Berichte 1/2014; pages 3- 14

[3] Gunthard Kraus, DG8GB, “A Low Noise Preamplifier With Improved Output Reflection For The 2m Band” 412013, UKW Berichte 4/2013 pages 203 - 222